ISSN 2395-1621

AUTOMATIC THREE PHASE LOAD EQUALIZER

#1Mrs. S.S. Kumbar, #2Shrikant Biradar, #3Akshay Thalkari, #4Sanket Jadhav

#1Guide & HOD (Electrical),
Sou. S.D. Ghodawat Cha. Trust's, Sanjay Ghodawat Group of Inst., Atigre, Kolhapur, Maharashtra, India.

#234BE Electrical,
Sou. S.D. Ghodawat Cha. Trust's, Sanjay Ghodawat Group of Inst., Atigre, Kolhapur, Maharashtra, India

ABSTRACT

Nowadays in India three phase unbalancing is a major problem. Unexpected power cut due to overloading, sudden rise in surge voltage, fluctuation in the voltage supply, etc. It may causes the heavy damage in the equipments of households, costly equipments in substation, industry. The faulty distribution system can lead some areas overloaded and some areas with less loaded. So to avoid these condition, controlling of the power and hence, controlling of the load is required in this areas. It leads to the load balancing technique and the load balancing is the process to prevent the system from the overloading condition. This project explains the details of load balancing and steps for the how to design and implement a load balancing in the power distribution.

Key Words: Three phase load voltage, load balancing, Electric load balancing, balancing techniques , etc.

ARTICLE INFO

Article History

Received: 25th March 2017

Received in revised form : 25th March 2017

Accepted: 25th March 2017

Published online : 4th May 2017

I. INTRODUCTION

Once the power transmission to sub-system is done the next thing is to distribute the power among all the consumers. The faulty distribution system can lead some areas overloaded and some areas with less loaded. So to avoid these condition, controlling of the power and hence, controlling of the load is required in this areas. It leads to the load balancing technique and the load balancing is the process to prevent the system from the overloading condition. This project explains the details of load balancing and steps for the how to design and implement a load balancing in the power distribution.

Demand of electricity is increases continuously due to various reasons of human beings. An industry increases the load day by day. Majority of the load is inductive in nature. So they consume the reactive power which will affect the generation of plant. Then additional power is required to increases generation or increases KVA rating of the transformer. This solution is very costly because I^2R losses are increases. In this system we can't need to increases the KVA ratings of the transformer. so cost of the system reduces and I^2R losses will also reduces.

II. LITERATURE REVIEW

In the three-phase power systems generated voltages are sinusoidal and equal in magnitude, with the individual phases 120^0 apart. However, the resulting power system voltages at the distribution end and the point of the utilization can be unbalanced for several reasons. The nature of the unbalance includes unequal voltage magnitudes at the fundamental system frequency (under-voltages & over-voltages), fundamental phase angle deviation, and unequal levels of harmonic distortion between the three phases. A major cause of voltage unbalance is the odd distribution of single-phase loads, that can be continuously changing across the three-phase power system.

2.1 BLOCK DIAGRAM

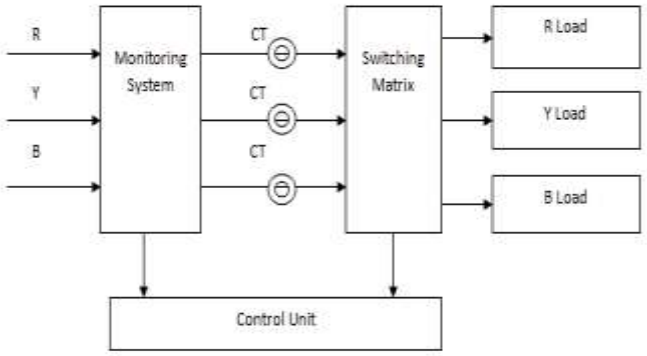

III. METHODOLOGY

3.1 Monitoring System

- ADE7758 (Monitoring IC)

The ADE7758 is maximum accuracy 3-phase electrical energy measurement IC with a serial interface and two pulse outputs. The ADE7758 incorporates second-order star-delta ADCs, it is a digital integrator, reference circuitry, and all the signal processing required to perform active, reactive, and apparent power measurement and RMS calculations.

The ADE7758 is suitable to measure active, reactive, and apparent power in different 3-phase configurations, such as STAR or DELTA services, with both three and four wires. The ADE7758 provides system calibration features for each phase, that is, RMS offset correction, phase calibration, and power calibration.

- Silicon Bridge Rectifier

A silicon bridge rectifier is an arrangement of four or more diodes in a bridge circuit configuration which provides same output polarity for either input polarity. It is used for converting an AC input into a DC output.

- Regulator

Regulator is used to get fixed voltage output and wide range application. Output current range 1.5 amps. The internal current limiting and thermal shut down features of these regulators essentially make them immune to overload. in addition to use as a fix voltage regulator this device can be use with external components to obtain adjustable output voltage and current.

3.2 CONTROL UNIT

- ATmega380/P

1. ATmega380/P has following features.
2. It is the low powered 8 bit microcontroller.
3. 32*8 working resister
4. Most single clock cycle execution
5. 32 KB in system self programmable flash program memory
6. 1kb EEPROM memory
7. It have thirty two (32) general purpose working registers . All the thirty two (32) registers are directly connected to the Arithmetic Logic Unit (ALU) and allowing two independent registers to be accessed in a single instruction executed in one clock cycle.
8. It provide the static operation while executing.

3.3 Switching Matrix

- TRIAC

TRIAC is a generic trademark for the three terminal electronic component, that conducts current in either direction when it triggered. we are using in switching matrix.

Glass passivity TRIACs in a plastic envelope, intended for use in a applications requiring high bidirectional transient and blocking voltage capability. It has the high thermal cycling performance. Typical applications of TRIAC include motor control, voltages industrial and domestic lighting and static switching.

IV. WORKING

The device work for three phases 440v 50 Hz Ac supply. If the load on one phase increases than others two phases its required load current will increases hence voltage lag as compare to other two line at that time unbalancing occurs.

Monitoring system use to measure the electrical component (voltage, current, frequency), by using Current Transformer (CTs) & Potential Transformer (PTs). In the monitoring system we use ADE7758. This monitoring IC which measures the electrical component and collects the raw data i.e. (I, V ,P.F). It consist of ADC (analogue to digital converter) which converts the analogue into digital collected by the measuring devices & feeds to the control unit.

The ATmega380/P is the controlling IC receives the raw data feed by the monitoring system (ADE7758). Thus it compare the standard or reference values provided for the desired result.

Control unit compare both given data and reference data and send the flag to controller to determine whether the system is balance or imbalance. When the flag receive the negative a command put on software i.e. “Phase Balance”, there after all the system phases are balanced.

It all for balancing the circuit switching matrix plays a important role. It is operated through TRIAC. TRIAC is used as switch by controlling gate pulse switching is carried out.

V. CONCLUSIONS

Due to the load unbalancing phase unbalancing problems has occurs. It can be overcome by using automatic three phase load equalizer. nowadays manually load shifting is done but to eliminate the manpower and for high accuracy this project is useful and which balance the three phase by monitoring electrical component, use control panels, switching matrix. It helps to improve the power system.

REFERENCES

[1] http://www.ijeatr.org/IJEATR.org/IJEATR_Vol.%202, %20No.%204,%20April%202014/Design.pdf

[2] https://en.wikipedia.org/wiki/Main_Page

[3] Atmel-42735-8-bit-AVR-Microcontroller-ATmega328-328P_Datasheet

[4] Three-Phase Automatic Load Balancing Applications A. Gouda*, A. Abul-Farag , H. Mostafa and Y. Gaber

